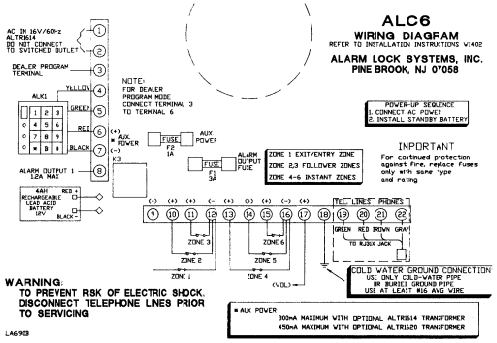
ALC6
WIRING DIAGRAM
REFER TO INSTALLATION INSTRUCTIONS W1402
ALARM LOCK SYSTEMS, INC.
PINE BROOK, NJ 07058
AC IN 16V/60Hz
ALTR814
DO NOT CONNECT
TO SWITCHED OUTLET
DEALER PROGRAM
TERMINAL
NOTE:
FOR DEALER
PROGRAM MODE
CONNECT TERMINAL 3
TO TERMINAL 6
AUX1
YELLOW
GREEN
RED
BLACK
AUX
POWER
ALARM OUTPUT 1
12A MAX
4AH
RECHARGEABLE
LEAD ACID
BATTERY
12V
RED +
BLACK -
FUSE
F2
1A
AUX
POWER
FUSE
F1
3A
ALARM
OUTPUT
FUSE
POWER-UP SEQUENCE
1. CONNECT AC POWER
2. INSTALL STANDBY BATTERY
ZONE 1 EXIT/ENTRY ZONE
ZONE 2,3 FOLLOWER ZONES
ZONE 4-6 INSTANT ZONES
IMPORTANT
For continued protection
against fire, replace fuses
only with same type
and rating
TELEPHONE LINES
GREEN RED BROWN GRAY
TO RJ38X JACK
ZONE 1
ZONE 2
ZONE 3
ZONE 4
ZONE 5
ZONE 6
(VOL)
COLD WATER GROUND CONNECTION
USE ONLY COLD-WATER PIPE
OR BURIED GROUND PIPE
USE AT LEAST #16 AWG WIRE
* AUX POWER
300mA MAXIMUM WITH OPTIONAL ALTR814 TRANSFORMER
450mA MAXIMUM WITH OPTIONAL ALTR1620 TRANSFORMER
WARNING:
TO PREVENT RISK OF ELECTRIC SHOCK,
DISCONNECT TELEPHONE LINES PRIOR
TO SERVICING
LA6903